Modelo UM600D 160MM CORDLESS GRASS SHEAR

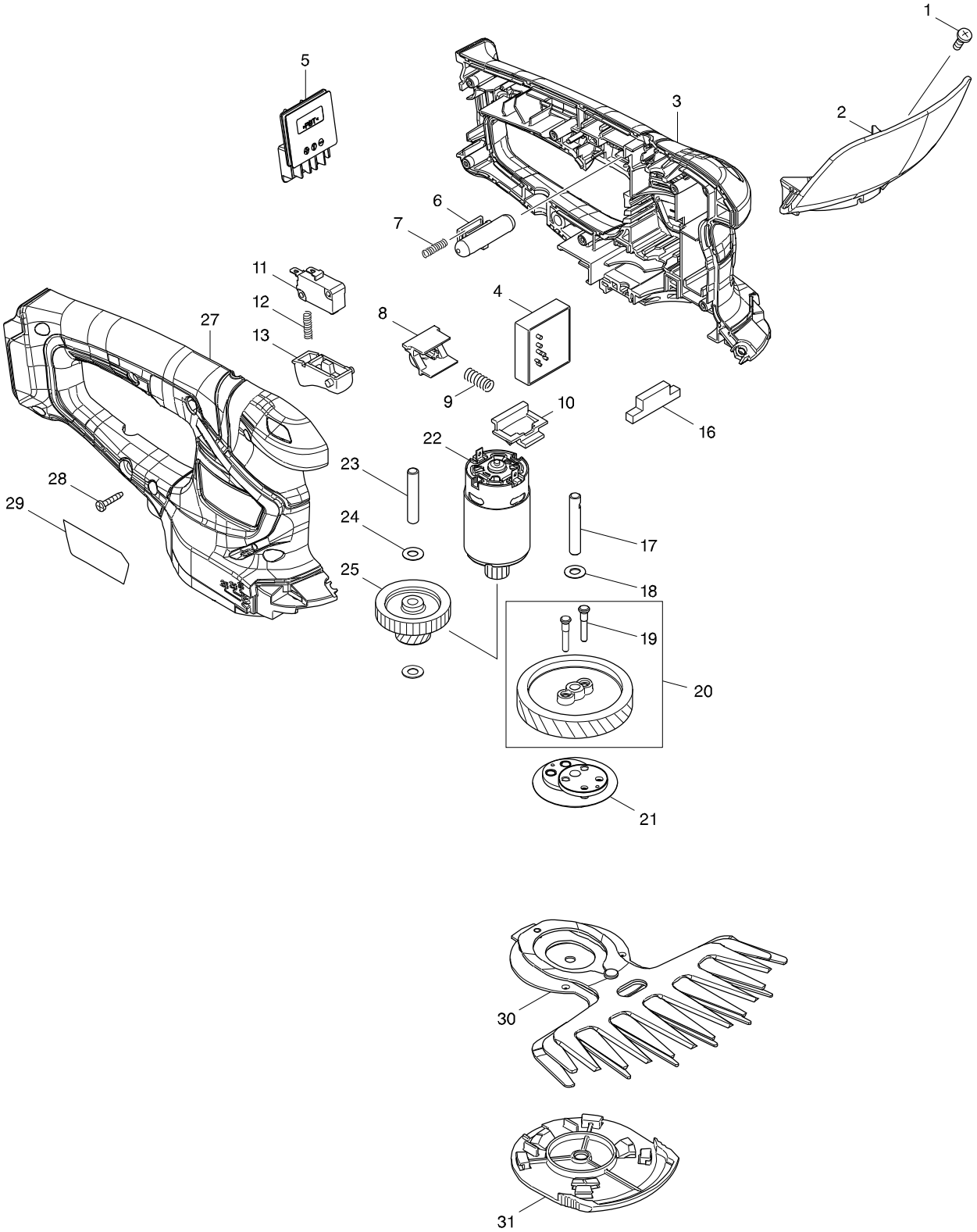

Modelo UM600D 160MM CORDLESS GRASS SHEAR

Artículo	Código	Descripción	Interc	Cantida	N/O	Ventas	Compra	Notas
001	915116-7	BINDING HEAD SCREW M4X12		1				
002	144342-3	PROTECTOR COMPLETE		1				
C10	819948-3	CAUTION LABEL		1				
003	183G04-0	HOUSING SET		1				
C10	931102-0	HEX. NUT M4		1				
C20	263002-9	RUBBER PIN 4		2				
C30	346275-0	PLATE		2				
D10		INC. 27						
004	632K11-9	CONTROLLER UNIT		1				
C10	688131-1	LINE FILTER		2				
005	644813-5	TERMINAL		1				
006	452438-9	LOCK OFF BUTTON		1				
007	231473-8	COMPRESSION SPRING 4		1				
008	457534-8	SLIDE PLATE		1				
009	234339-1	COMPRESSION SPRING 6		1				
010	454879-5	LOCK LEVER		1				
011	650744-8	SWITCH D3V-16-3C26		1				
012	231473-8	COMPRESSION SPRING 4		1				
013	417564-1	SWITCH LEVER		1				
016	451814-4	DUST GUARD		1				
017	268254-7	PIN 6		1				
018	253715-0	FLAT WASHER 6		1				
019	268256-3	PIN 4		2				
020	135883-0	HELICAL GEAR 47 ASS'Y		1				
D10		INC. 19						
021	161598-3	CRANK COMPLETE		1				
022	629258-8	DC MOTOR		1				
023	268076-5	PIN 6		1				
024	253715-0	FLAT WASHER 6		2				
025	226831-1	GEAR 12-31		1				
027	183G04-0	HOUSING SET		1				
C10	931102-0	HEX. NUT M4		1				
C20	263002-9	RUBBER PIN 4		2				
C30	346275-0	PLATE		2				
D10		INC. 3						
028	266429-2	TAPPING SCREW 3X16		6				
029	853F88-3	UM600D NAME PLATE		1				
030	195267-4	SHEAR BLADE ASSEMBLY SET		1				
C10	188369-3	OIL VESSEL SET		1				
031	140451-6	UNDER COVER COMPLETE		1				
A01	452055-5	BLADE COVER		1				
A02	457426-1	GRASS RECEIVER 160		1				
E01	812G42-2	SOUND 83DB LABEL		1				