MX

Diagram / Parts List

HP1640

HAMMER DRILL 16MM

2019/10

(MX) HP1640 / HAMMER DRILL 16MM

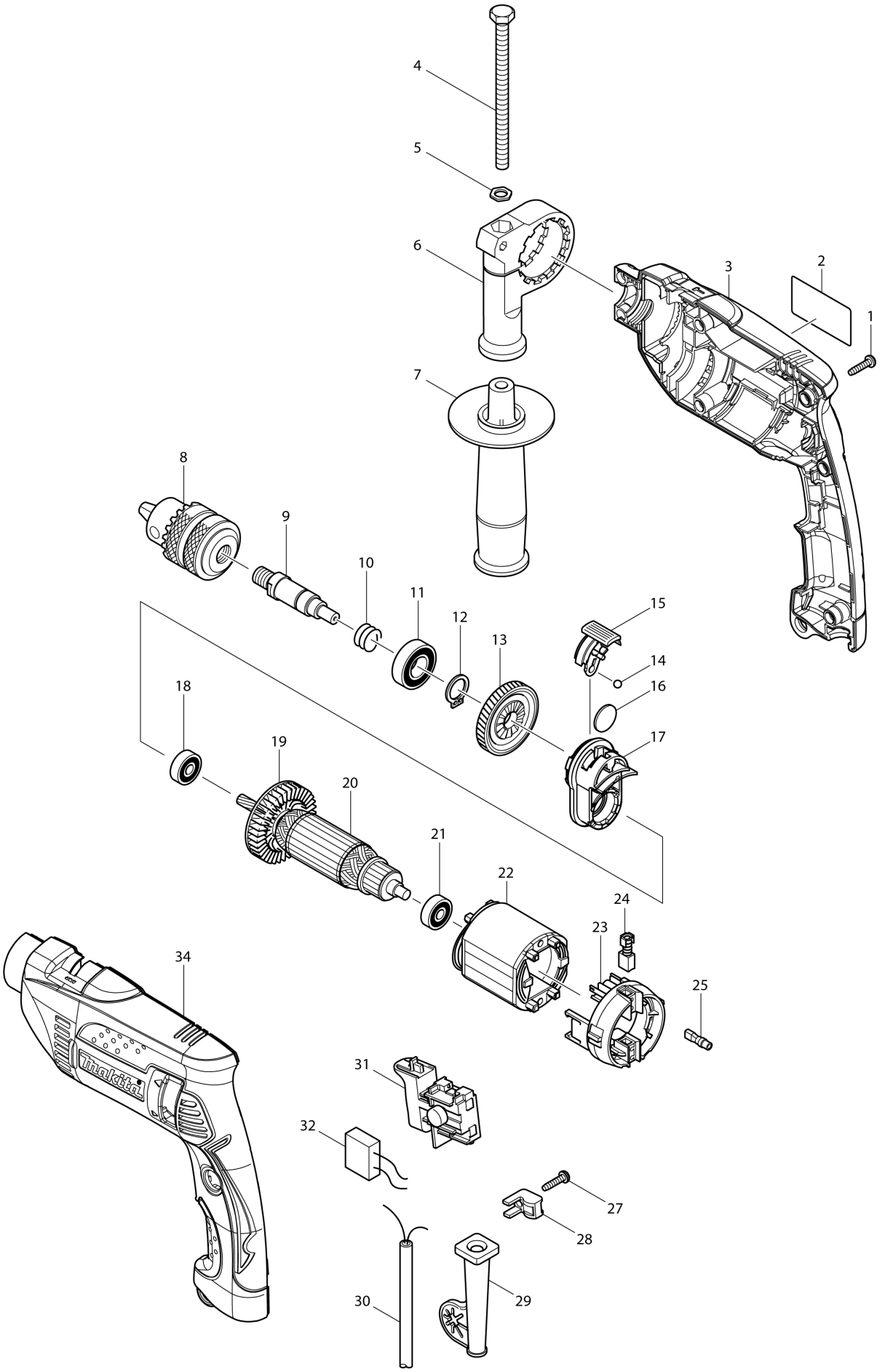

MX MEXICO

HP1640 / HAMMER DRILL 16MM

Item	Sub	Parts No.	Parts Description	Qty	I/C	E/C No.	Close No.	Remark
001		265995-6	TAPPING SCREW 4X18	7			C7193	
001-1		265A48-7	TAPPING SCREW 4X18	7	O	C7193		
002		866001-6	HP1640 NAME PLATE	1		A6018		
003		188611-2	HOUSING SET	1				
	C10	345399-9	PLATE	2				
	D10		INC. 34					
004		921923-8	HEX. BOLT M8X120	1				
005		345280-4	HEX. WASHER	1				
006		417630-4	GRIP BASE	1				
007		153503-4	GRIP 36 COMPLETE	1				
008		763142-8	DRILL CHUCK S13	1			87138	
008-1		763115-1	DRILL CHUCK S13	1	S	87138		
009		324397-6	SPINDLE	1				
010		233389-3	COMPRESSION SPRING 15	1				
011		211201-7	BALL BEARING 6002LLB	1				
012		961055-9	RETAINING RING S-15	1				
013		226579-5	HELICAL GEAR 45	1				
014		216018-3	STEEL BALL 5.0	1				
015		418319-7	CHANGE LEVER	1				
016		345354-1	PLATE 19	1				
017		153831-7	CAM HOLDER COMPLETE	1			91508	
017-1		141165-0	CAM HOLDER COMPLETE	1	<	91508		
018		210023-2	BALL BEARING 627DDW	1				
019		240067-8	FAN 55	1				
020		517456-5	ARMATURE ASS'Y 115V	1				
	D10		INC. 18,19,21					
021		211028-5	BALL BEARING 627LB	1				
022		633566-1	FIELD 115V	1				
023		638237-5	BRUSH HOLDER UNIT	1				
024		191927-6	CARBON BRUSH CB-407	1			85070	
024-1		195007-0	CARBON BRUSH CB-407	1	<	85070		
025		686038-5	RECEPTACLE SLEEVE	2				
027		265995-6	TAPPING SCREW 4X18	1			C7193	
027-1		265A48-7	TAPPING SCREW 4X18	1	O	C7193		
028		687260-7	STRAIN RELIEF	1			C7668	
028-1		687260-7	STRAIN RELIEF	1	O	C7668		
029		682549-8	CORD GUARD 8-85	1				
030		660002-4	POWER SUPPLY CORD AWG#18-2-2.0	1				
031		650570-5	SWITCH TG843TB-2	1				
034		188611-2	HOUSING SET	1				
	C10	345399-9	PLATE	2				
	D10		INC. 3					
A01		324219-0	DEPTH GAUGE	1				
A02		763440-0	CHUCK KEY S13	1			87138	
A02-1		763430-3	CHUCK KEY S13	1	S	87138		

Interchange
O : Yes
X : No
< : the new part can be substituted for the current.
> : the current part can be substituted for the new.
S : Interchangeable as a set.