ES	SPAIN

Diagram / Parts List

DF488D

CORDLESS DRIVER DRILL

2022/02

(ES) DF488D / CORDLESS DRIVER DRILL

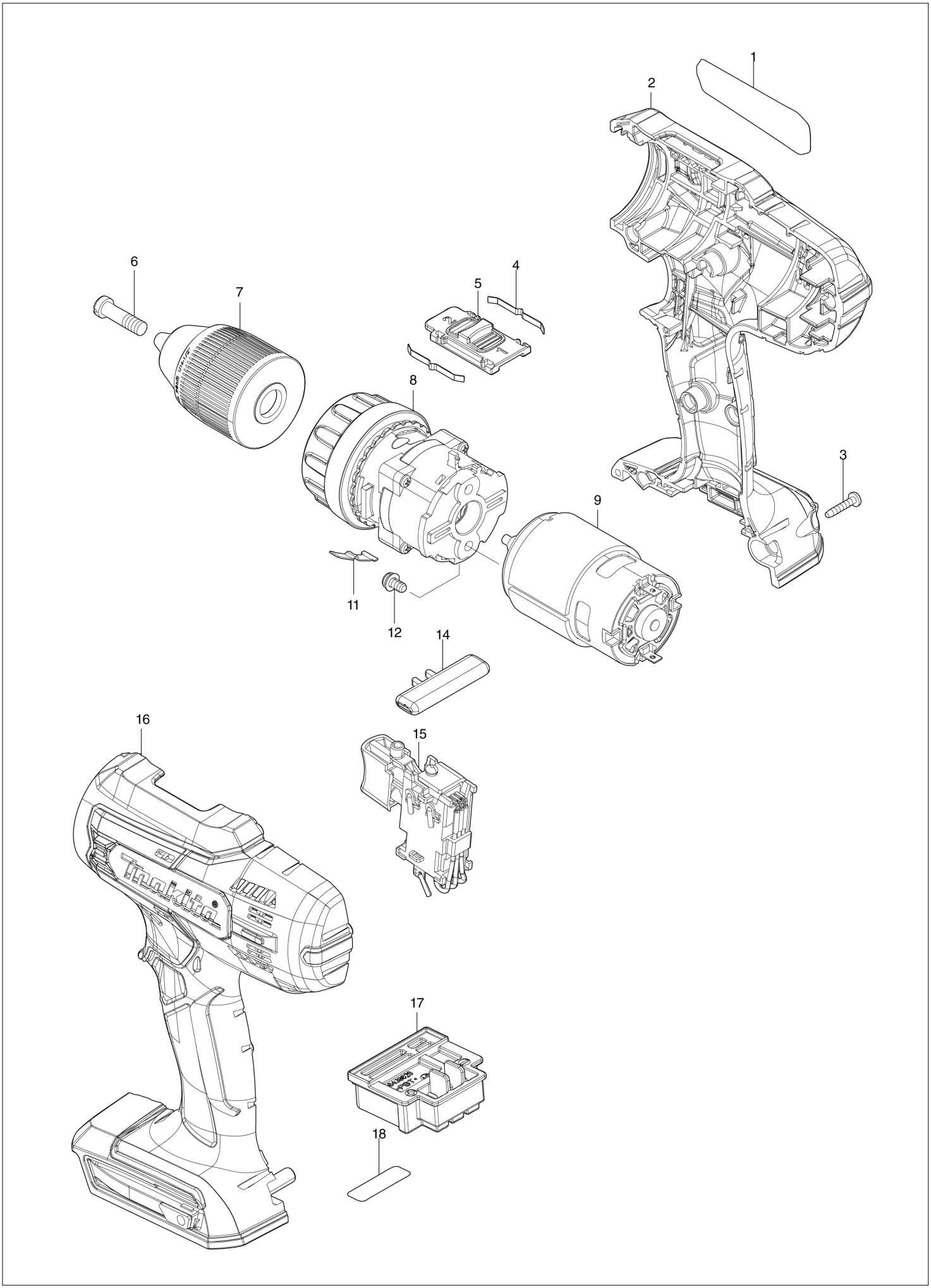

ES	SPAIN

DF488D / CORDLESS DRIVER DRILL

Item	Sub	Parts No.	Parts Description	Qty	I/C	E/C No.	Close No.	Remark
001		858A54-5	DF488D NAME PLATE	1				
002		183R93-1	HOUSING SET	1				
	C10	252126-6	HEX. LOCK NUT M4-7	2				
	D10		INC. 16					
003		266429-2	TAPPING SCREW 3X16	9				
004		232220-0	LEAF SPRING	2				
005		127754-5	SPEED CHANGE LEVER ASSEMBLY	1				
	C10	233438-6	COMPRESSION SPRING 4	2				
006		251468-5	- FLAT HEAD SCREW M6X22	1				
007		766004-9	KEYLESS DRILL CHUCK 13	1			DB895	
007-1		763260-2	KEYLESS DRILL CHUCK 13	1	O	DB895		
008		127734-1	GEAR ASSEMBLY	1				
009		629937-8	DC MOTOR	1				
011		232182-2	LEAF SPRING	1				
012		911108-4	PAN HEAD SCREW M4X8	2				
014		452399-3	F/R CHANGE LEVER	1				
015		638862-2	SWITCH UNIT	1				
	C10	688164-6	LINE FILTER	1				
	C20	688165-4	LINE FILTER	1				
016		183R93-1	HOUSING SET	1				
	C10	252126-6	HEX. LOCK NUT M4-7	2				
	D10		INC. 2					
017		643862-9	TERMINAL	1				
018		858A58-7	DF488D SERIAL NO. LABEL	1				
A01		784637-8	+- BIT 2-45	1				
A02A		***DC18WA	DC18WA BATTRY CHARGER	1				
	D10		COMPO-PARTS					
A02B		***DC18WA	DC18WA BATTRY CHARGER	1				
	D10		COMPO-PARTS					
A02C		***DC18WB	DC18WB BATTRY CHARGER	1				
A02D		***DC18WB	DC18WB BATTRY CHARGER	1				
A03A		198186-3	BATTERY BL1815G SET	2				
A03B		191N69-0	BATTERY BL1820G SET	2		Z49347		
A03C		198186-3	BATTERY BL1815G SET	2				
A03D		191N69-0	BATTERY BL1820G SET	2				
A04		452652-7	BATTERY COVER	1				
A05		821844-3	PLASTIC CARRYING CASE	1				
	C10	455522-9	SLIDE LATCH	2				
A06A		8027B9-2	DF488DWE PLASTIC CASE LABEL	2				
A06B		8029A2-1	DF488DWAE PLASTIC CASE LABEL	2				
A06C		8044V1-6	DF488D002 PLASTIC CASE LABEL	2				
A06D		8044V2-4	DF488D004 PLASTIC CASE LABEL	2				

A:DF488DWE(H)
B:DF488DWAE(H)
C:DF488D002(H)
D:DF488D004(H)

Interchange
O : Yes
X : No
< : the new part can be substituted for the current.
> : the current part can be substituted for the new.
S : Interchangeable as a set.