MX

Diagram / Parts List

HP001G

CORDLESS HAMMER DRIVER DRILL

2020/06

(MX) HP001G / CORDLESS HAMMER DRIVER DRILL

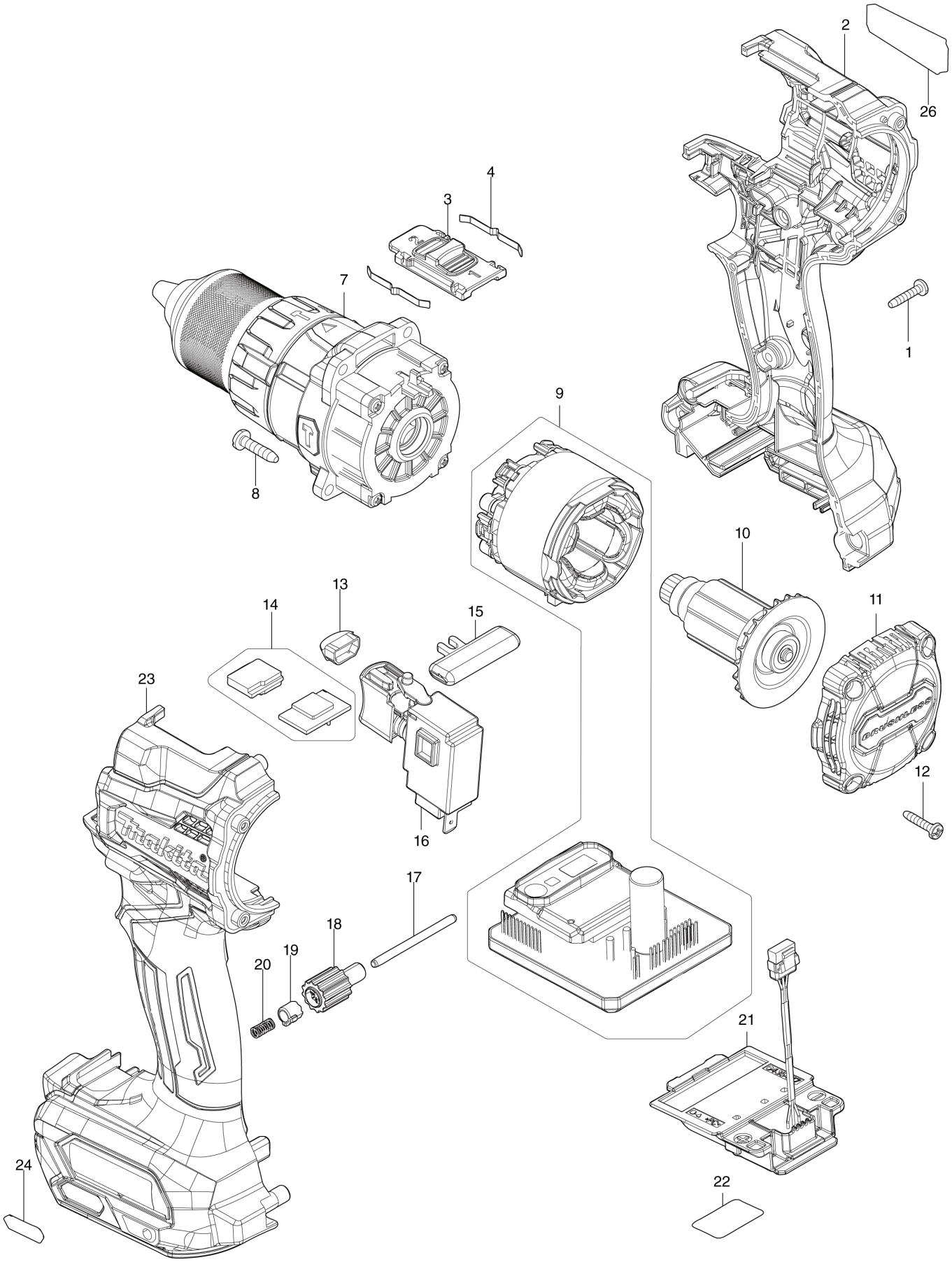

MX	MEXICO

HP001G / CORDLESS HAMMER DRIVER DRILL

Item	Sub	Parts No.	Parts Description	Qty	I/C	E/C No.	Close No.	Remark
001		266130-9	TAPPING SCREW BIND PT 3X16	7				
002		183N73-3	HOUSING SET	1				
	C10	263005-3	RUBBER PIN 6	2				
	C20	252126-6	HEX. LOCK NUT M4-7	2				
	C30	422569-8	SPONGE SHEET	2				
	D10		INC. 23					
003		127494-5	SPEED CHANGE LEVER ASSEMBLY	1				
	C10	233438-6	COMPRESSION SPRING 4	2				
004		232220-0	LEAF SPRING	2				
007		136229-3	KEYLESS DRILL CHUCK ASS'Y	1				
008		266326-2	TAPPING SCREW 4X18	4				
009		629476-8	STATOR COMPLETE	1				
	C10	8009H0-8	SWITCH LABEL	1				
010		619613-2	ROTOR	1				
011		412361-0	REAR COVER	1				
012		266130-9	TAPPING SCREW BIND PT 3X16	4				
013		620549-0	LED CIRCUIT	1				
014		620C81-2	SENSOR CIRCUIT	1				
015		419041-9	F/R CHANGE LEVER	1				
016		651443-5	SWITCH C3JR-4B	1				
017		256949-4	ROD 3	1				
018		140R76-4	DIAL COMPLETE	1				
019		313288-6	DIAL CAM	1				
020		232597-3	COMPRESSION SPRING 3	1				
021		632P49-4	TERMINAL UNIT	1				
022		856S98-7	HP001G SERIAL NO. LABEL	1				
023		183N73-3	HOUSING SET	1				
	C10	263005-3	RUBBER PIN 6	2				
	C20	252126-6	HEX. LOCK NUT M4-7	2				
	C30	422569-8	SPONGE SHEET	2				
	D10		INC. 2					
024		8007R2-2	XGT LOGO LABEL	1				
026		856S91-1	HP001G NAME PLATE	1				
A01		127551-9	GRIP ASSEMBLY	1				
	C10	140S65-5	ARM R COMPLETE	1				
	C20	140S66-3	POLE COMPLETE	1				
	C30	266886-4	HEX. BOLT M8X65	1				
	C40	319966-6	ARM L	1				
	C50	962055-2	RETAINING RING (INT) R-15	1				
	C60	265785-7	THUMB SCREW M5X10	1				
	C70	931202-6	HEX. NUT M5	1				
A02		251314-2	+ SCREW M4X12	2				
A03		346317-0	HOOK	1				
A04		784637-8	+- BIT 2-45	2				
A05		452947-8	BIT HOLDER	1				
A06		122576-8	STOPPER POLE ASS'Y	1				
A07B		412393-7	BATTERY COVER	1				
A08B		***DC40RA	DC40RA FAST CHARGER	1				
	D10		COMPO-PARTS					
A09B		191B26-6	BATTERY BL4040 SET	2				
A10B		821551-8	CONNECTOR PLASTIC CASE (TYPE3)	1				
	C10	453974-8	LATCH	4				
A11B		835F93-2	INNER TRAY	1				
A12B		8010L2-1	HP001GM201 INDICATION LABEL	1				
A13B		8010L3-9	HP001GM201 PLASTIC CASE LABEL	2				

B:HP001GM201(L)

Interchange
O : Yes
X : No
< : the new part can be substituted for the current.
> : the current part can be substituted for the new.
S : Interchangeable as a set.